GENERAL NOTES:

1. THE GENERAL CONTRACTOR SHALL COORDINATE STRUCTURAL DRAWINGS WITH ARCHITECTURAL, CIVIL, MECHANICAL, PLUMBING AND ELECTRICAL DRAWINGS, INCLUDING THE SIZE AND LOCATION OF MISCELLANEOUS ITEMS AFFECTING THE STRUCTURAL WORK SUCH AS SMALL OPENINGS, PIPE SLEEVES, RECESSES, BENT PLATES, ETC. PROMPTLY NOTIFY THE ARCHITECT/ENGINEER OF ANY DISCREPANCIES OR OMISSIONS. OPENINGS THROUGH BEAMS, GIRDERS AND/OR COLUMNS SHALL BE VERIFIED BY ENGINEER.

2. THE GENERAL CONTRACTOR SHALL VERIFY ALL DIMENSIONS AND EXISTING SITE CONDITIONS PRIOR TO COMMENCING WORK. PROMPTLY NOTIFY THE ARCHITECT/ENGINEER OF ANY DISCREPANCIES BETWEEN ACTUAL SITE CONDITIONS AND THE CONTRACT DOCUMENTS.

3. THE STRUCTURE IS DESIGNED TO BE SELF-SUPPORTING AND STABLE AFTER THE BUILDING IS FULLY COMPLETED. THE ERECTION PROCEDURE AND SEQUENCE INCLUDING THE DESIGN ADEQUACY AND SAFETY OF ERECTION BRACING, SHORING, RE-SHORING, TEMPORARY SUPPORTS, ETC., ARE THE SOLE RESPONSIBILITY OF THE CONTRACTOR.

4. DO NOT SCALE DRAWINGS. ALL WORK REQUIRING MEASURING SHALL BE DONE ACCORDING TO FIGURES ON DRAWING. ANY MISSING DIMENSIONS WILL BE FURNISHED UPON REQUEST.

5. WHERE A DETAIL IS SHOWN FOR ONE CONDITION, IT SHALL ALSO APPLY FOR ALL LIKE OR SIMILAR CONDITIONS UNLESS NOTED OTHERWISE.

6. THESE GENERAL NOTES APPLY WHERE OTHER PROVISIONS ARE NOT PROVIDED BY THE DRAWINGS, SPECIFICATIONS OR TYPICAL DETAILS. IN CASE OF SPECIAL CONDITIONS INDICATED ON DRAWINGS, THE DRAWINGS SHALL GOVERN OVER THE SPECIFICATIONS.

7. CONSTRUCTION SHALL BE IN ACCORDANCE WITH FEDERAL, STATE, AND LOCAL ORDINANCES, AND THE INTERNATIONAL BUILDING CODE 2018.

STRUCTURAL DESIGN LOAD INFORMATION:

(PER IBC 2018 & ASCE7-16)
WIND LOAD:
BASIC DESIGN WIND SPEED V = 115 MPH (NON-HURRICANE ZONE)
BASIC DESIGN WIND SPEED V = 180 MPH (HURRICANE ZONE)

RISK CATEGORY = II
IMPORTANCE FACTOR, Iw = 1.0
EXPOSURE = C

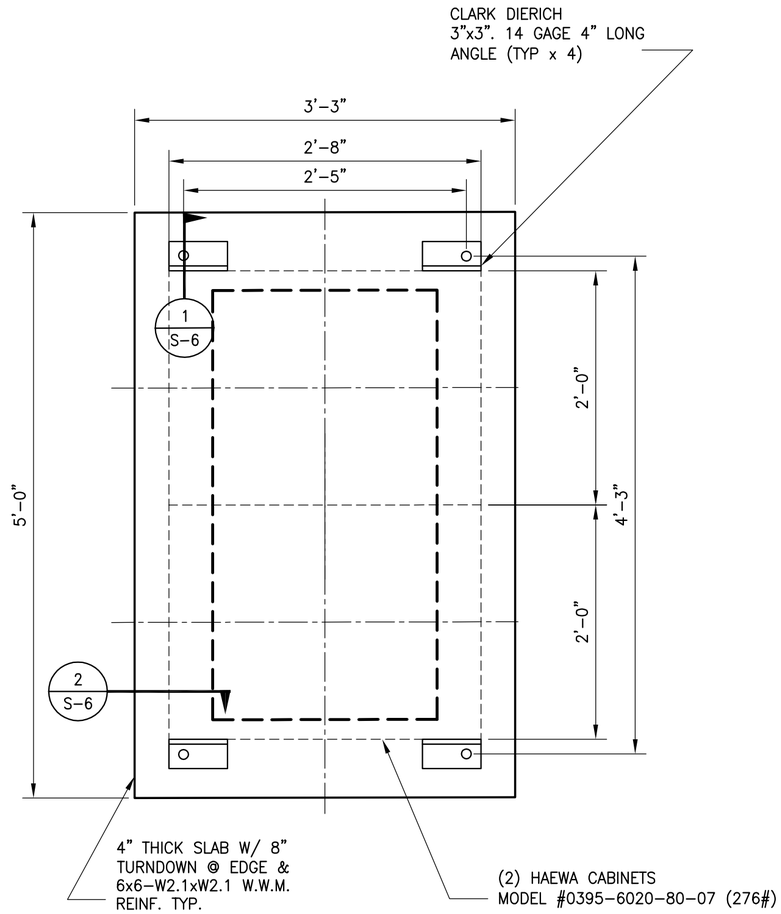

A / S-6 GEN. 2 ELECTRIAL BOX (BASE) ACHORAGE PLAN ON CONCRETE SLAB
SCALE: 1"=1'-0"

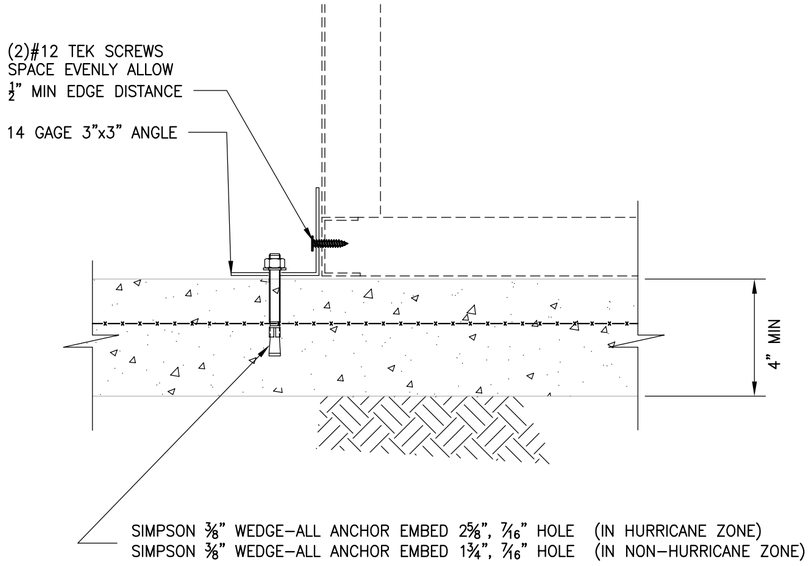

1 / S-6 EXISTING CONCRETE MOUNT (GEN 2 BOX)
SCALE: 3"=1'-0"

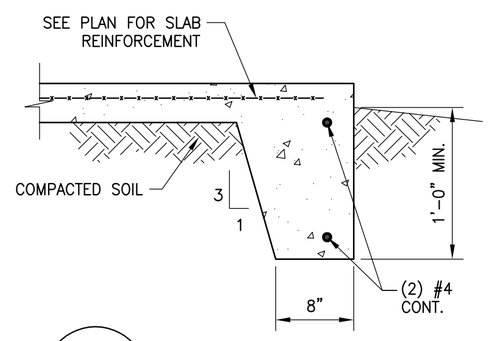

2 / S-6 PAD TURNDOWN FOOTING
SCALE: N.T.S.

ISSUED FOR CONSTRUCTION

REV	DESCRIPTION	DRWN	APPR	DATE	REV	DESCRIPTION	DRWN	APPR	DATE

RAVOLT ELECTRIAL BOX

NEW CONCRETE SLAB MOUNT (DOUBLE GEN 2 BOX) NOTES, ANCHOR PLANS AND DETAILS

SCALE:
DATE: 05/17/23
DRWN BY: TJB
CHKD BY: PDC
SE NUMBER: S-6
SE FILE NAME: 21458.dwg
SHT
OF
REV

Se STABILITY ENGINEERING
1376 Church St, Ste 200 , Decatur, GA 30030 Ph/Fax: 404-377-9316